Vermont Corp

vermontcorp.us / sales@vermontcorp.us

Diffuser DCR / Steel - Aluminium

DUCTS+GRILLES+DIFFUSERS+FILTERS+FITTINGS+LOUVERS+DAMPERS

Ceiling Diffuser featuring a 24-inch round face, an adjustable center cone, an aerodynamic plenum box for efficient 360° air distribution, and a round neck for connection to flexible ductwork.

1 Finishes

Baked electrostatic powder paint (polyester) bright white standard. Other colors available: grey (electrostatic powder paint) and black (liquid bake coating).

2 Dimensions

Available with neck diameters of 6", 8", 10", 12", and 14".

3 Materials

Made entirely of Steel with an option in Aluminum

4 Applications

Ideal for commercial and office applications where a uniform appearance is desired across different airflow volumes. Provides a clean, architectural appearance.

5 View

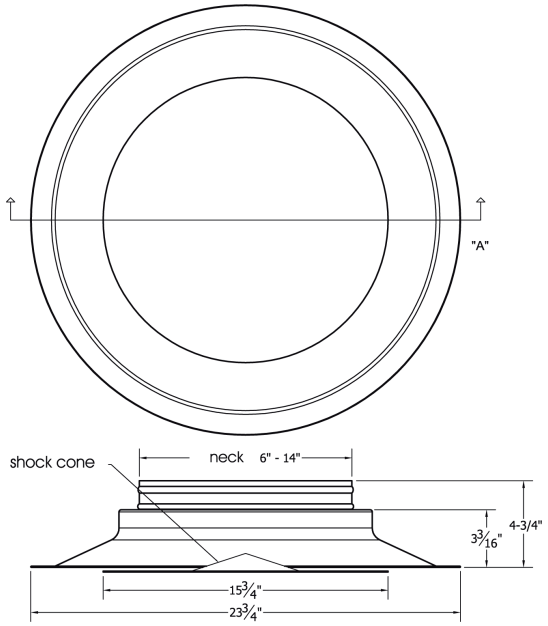

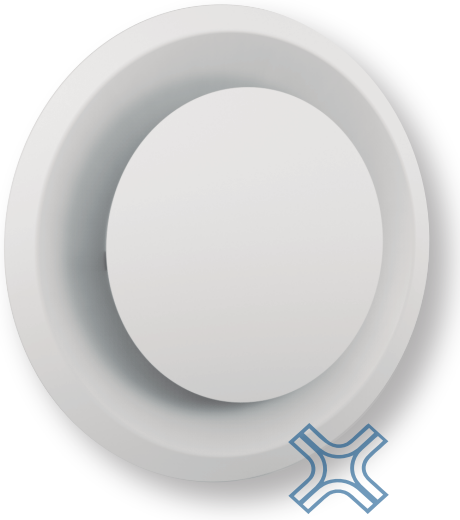

PACKAGING:
Airtight plastic individual packaging.

Air Distribution Products

VERMONT CORP reserves the right to make changes without prior notice

Diffuser DCR / Steel - Aluminium

DUCTS+GRILLES+DIFFUSERS+FILTERS+FITTINGS+LOUVERS+DAMPERS

6 Mounting

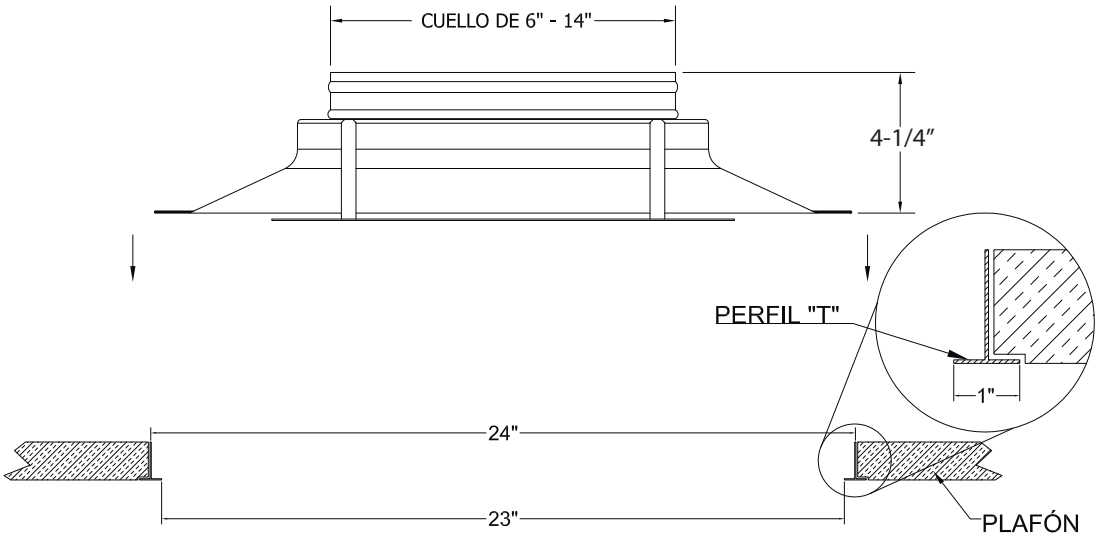

7 Nomeclature

DCR A B 12 C

PRODUCT | MATERIAL | PAINT COLOR | DIAMETER | CONTROL

DCR PRODUCT	A MATERIAL	B PAINT COLOR	12 DIAMETER	C CONTROL
DCR CEILING DIFFUSER FEATURING A 24-INCH ROUND FACE	**A** STEEL **L** ALUMINUM	**B** WHITE **A** NATURAL ALUMINUM **N** BLACK	**06** **08** **10** **12** **14**	**S** WITHOUT DAMPER **X** WITH OPPOSED BLADE DAMPER **C** BUTTERFLY VOLUME DAMPER

VERMONT CORP reserves the right to make changes without prior notice

Diffuser DCR / Steel - Aluminium

DUCTS+GRILLES+DIFFUSERS+FILTERS+FITTINGS+LOUVERS+DAMPERS

8 You might also be interested in

Compuerta COMPC

Circular Damper with reinforced construction and an adjustable quadrant.

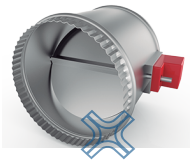

Compuerta COREC

Circular Damper with reinforced, airtight construction and a circumferential neoprene seal.

Compuerta Mariposa CVM

Circular Damper with two opposed blades for airflow volume control.

VERMONT CORP reserves the right to make changes without prior notice