Vermont Corp
vermontcorp.us / sales@vermontcorp.us

Damper CBL / Steel - Aluminium

DUCTS+GRILLES+DIFFUSERS+FILTERS+FITTINGS+LOUVERS+DAMPERS

Gravity-operated (barometric) damper with an L-frame and blades designed to open in response to air pressure, providing one-way airflow control and preventing reverse airflow.

1 Finishes

Baked electrostatic powder paint (polyester) bright white standard. Other colors available: grey (electrostatic powder paint) and black (liquid bake coating).

2 Dimensions

Available in nominal sizes from 9" x 9" to 36" x 36", manufactured in a single-piece configuration.

3 Construction

Made entirely of Steel with an option in Aluminum

4 Applications

Designed for use in industrial buildings, warehouses, and other large-scale ventilation applications.

5 View

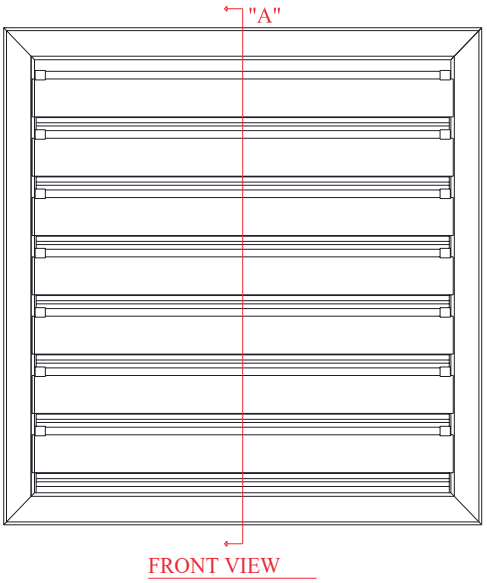

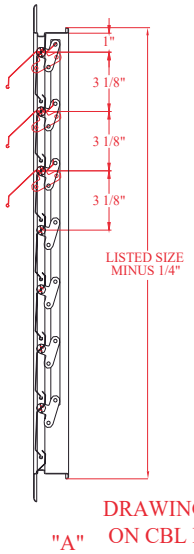



PACKAGING:

Airtight plastic packaging

Air Distribution Products

VERMONT CORP reserves the right to make changes without prior notice

Damper CBL / Steel - Aluminium

DUCTS+GRILLES+DIFFUSERS+FILTERS+FITTINGS+LOUVERS+DAMPERS

6 Mounting

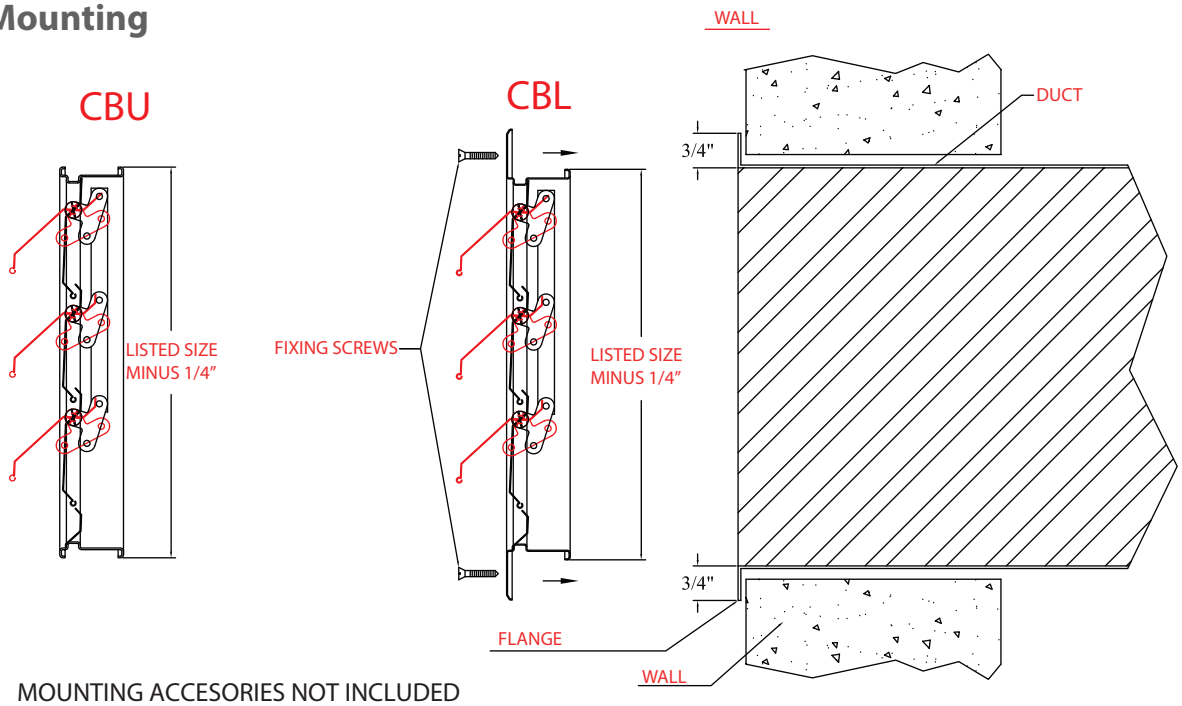

MOUNTING ACCESORIES NOT INCLUDED

7 Nomenclature

CBL (PRODUCT) **L** (MATERIAL) **B** (PAINT COLOR) **24.00** (WIDTH) **24.00** (HEIGHT)

CBL PRODUCTO	L MATERIAL	B COLOR DE PINTURA	24.00 ANCHO	24.00 ALTO
CBL BAROMETRIC BACKDRAFT DAMPER L-FRAME CONSTRUCTION	**A** STEEL **L** ALUMINUM	**A** NATURAL ALUMINUM **B** WHITE **N** BLACK	2 WHOLE INCHES Y 2 DECIMALS	2 WHOLE INCHES Y 2 DECIMALS

VERMONT CORP reserves the right to make changes without prior notice