Vermont Corp
vermontcorp.us / sales@vermontcorp.us

Damper CBS / Steel

DUCTS+GRILLES+DIFFUSERS+FILTERS+FITTINGS+LOUVERS+DAMPERS

Gravity-operated (barometric) damper with an L-frame and blades designed to open in response to air pressure, providing one-way airflow control and preventing reverse airflow.

1 Finishes

Baked electrostatic powder paint (polyester) bright white standard. Other colors available: grey (electrostatic powder paint) and black (liquid bake coating).

2 Dimensions

Available in nominal sizes from 9" x 9" to 48" x 48", manufactured in a single-piece configuration.

3 Construction

Frame: Galvanized steel, minimum G60 coating.
Blades: Aluminum.

4 Applications

Designed for use in industrial buildings, warehouses, and other large-scale ventilation applications.

5 View

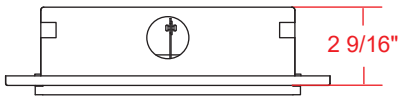

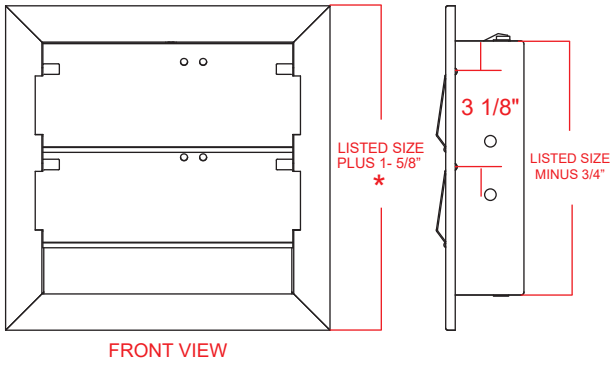

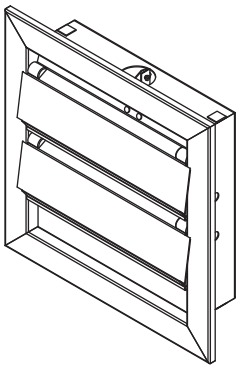



*For sizes =< 14"
Listed Size + 1-9/16

PACKAGING:

Airtight plastic packaging

Air Distribution Products

VERMONT CORP reserves the right to make changes without prior notice

Damper CBS / Steel

DUCTS+GRILLES+DIFFUSERS+FILTERS+FITTINGS+LOUVERS+**DAMPERS**

6 Nomenclature

CBS	A	B	48.00	48.00
PRODUCT	MATERIAL	PAINT COLOR	WIDTH	HEIGHT

CBS PRODUCTO	A MATERIAL	B COLOR DE PINTURA	48.00 ANCHO	48.00 ALTO
CBS L-FRAME BAROMETRIC DAMPER	**A** STEEL	**A** NATURAL ALUMINUM **B** WHITE **N** BLACK	2 WHOLE INCHES Y 2 DECIMALS	2 WHOLE INCHES Y 2 DECIMALS

VERMONT CORP reserves the right to make changes without prior notice