Vermont Corp

vermontcorp.us / sales@vermontcorp.us

Duct SNAP

DUCTS+GRILLES+DIFFUSERS+FILTERS+FITTINGS+LOUVERS+DAMPERS

Galvanized steel round duct with a longitudinal snap-lock seam, featuring a crimped and beaded end on one side and a beaded end on the other, allowing for easy installation without the need for coupling nipples between duct sections.

1 Finishes

Galvanized Steel
(Minimum G60 galvanized coating)

2 Dimensions

4 ft Length - 26 Gauge - Diameters 4" to 18"
4 ft Length - 28 Gauge - Diameters 4" to 18"
3 ft Length - 30 Gauge - Diameters 4" to 18"

3 Construction

Manufactured from galvanized steel in 24, 26, 28, and 30 gauges.

4 Applications

Due to its design, SNAP-LOCK round duct is ideal for low-pressure HVAC and ventilation systems in both residential and commercial applications.

5 View

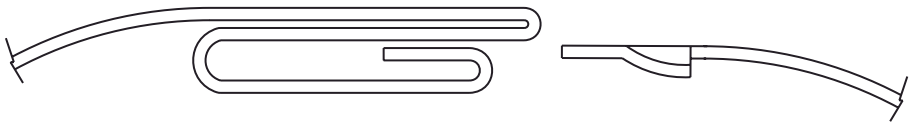

SEAM LONGITUDINAL SNAP

Effective Length
4 ft - 47”
3 ft - 35”

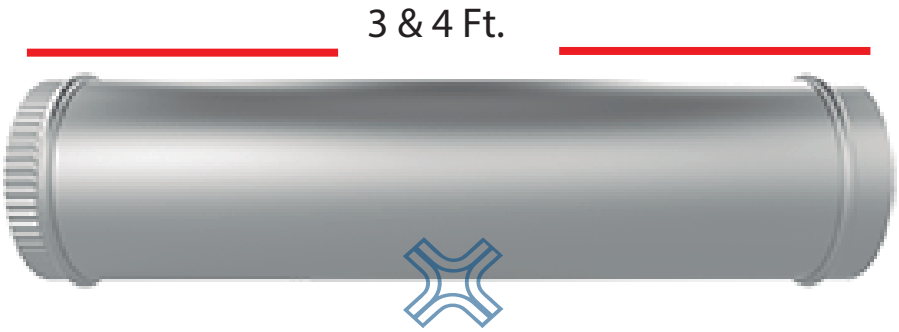

Air Distribution Products

VERMONT CORP reserves the right to make changes without prior notice

Spiral Duct SRCC

DUCTS+GRILLES+DIFFUSERS+FILTERS+FITTINGS+LOUVERS+DAMPERS

6 Mounting

SNAP	B	26	12	47
PRODUCTO	ACABADO	CALIBRE	DIÁMETRO	LARGO EFECTIVO

SNAP PRODUCT	B FINISH	26 GAUGE	12 DIAMETER	47 EFFECTIVE LENGTH
SNAP DUCTO SNAP	**B** SHINY **O** OPAQUE	24 26 28 30	2 WHOLE INCHES	35” 47” 59”

VERMONT CORP reserves the right to make changes without prior notice