Vermont Corp
vermontcorp.us / sales@vermontcorp.us

Louver LA4 / Aluminum-Steel

LOUVERS + SPIRODUCT + GRILLES+ DIFFUSERS + FILTERS + FLEXIBLE DUCT + ACCESORIES

A louver featuring horizontally adjustable blades that move simultaneously via a control lever, mounted on a 4-inch frame, with a 6-inch frame option.
This model is manufactured from galvanized steel or aluminum and incorporates plastic bushings for smoother operation.

1 Finishes

Electrostatic powder coating, baked in Brilliant White (standard).
Other colors available: natural gray (electrostatic powder coating) and black (baked liquid coating)

2 Dimensions

Available in even sizes from 12”x12” to 48”x60”

3 Construction

Manufactured from steel, model LA4A, with an aluminum LA4L option. Includes a galvanized steel sheet metal housing and a galvanized finish.

- Option with frame and angle flange.

- Option with a mesh screen featuring an angle flange.

4 Applications

For ventilation in industrial facilities, large warehouses, and similar spaces.

5 LA4 Louver-Views

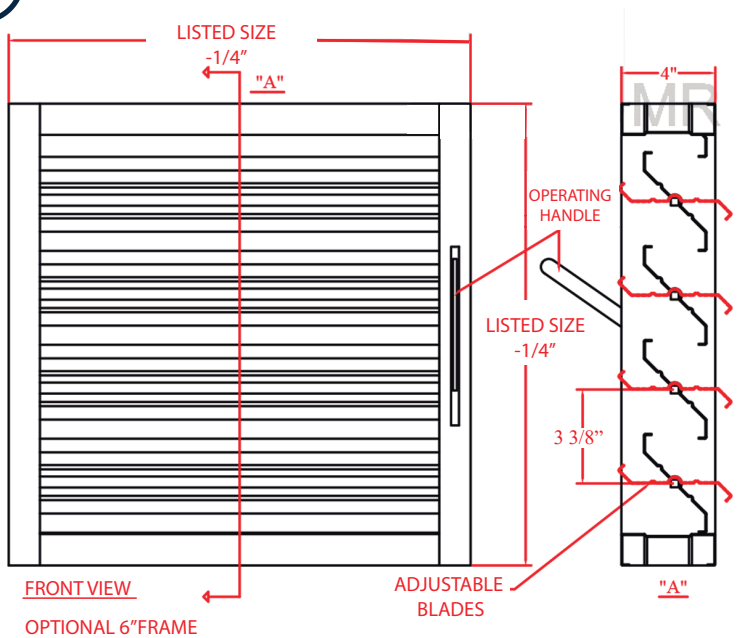



Note:

Individually Sealed in Plastic Packaging

VERMONT CORP reserves the right to make changes without prior notice

Louver LA4 / Aluminum-Steel

LOUVERS + SPIRODUCT + GRILLES+ DIFFUSERS + FILTERS + FLEXIBLE DUCT + ACCESORIES

6 Mounting

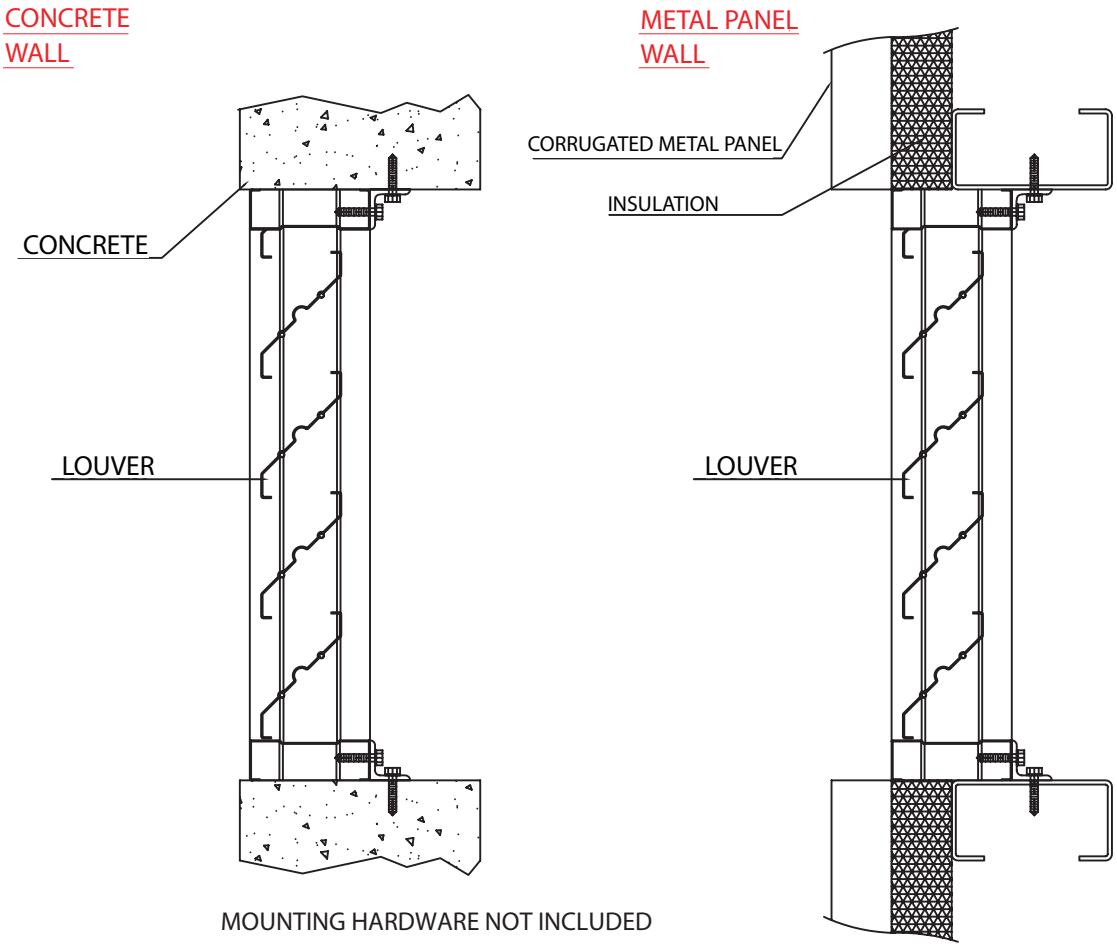

MOUNTING HARDWARE NOT INCLUDED

VERMONT CORP reserves the right to make changes without prior notice

Louver LA4 / Aluminum-Steel

LOUVERS + SPIRODUCT + GRILLES+ DIFFUSERS + FILTERS + FLEXIBLE DUCT + ACCESORIES

6 Mounting(Continued)

TYPICAL MOUNTING

FLANGED MOUNTING

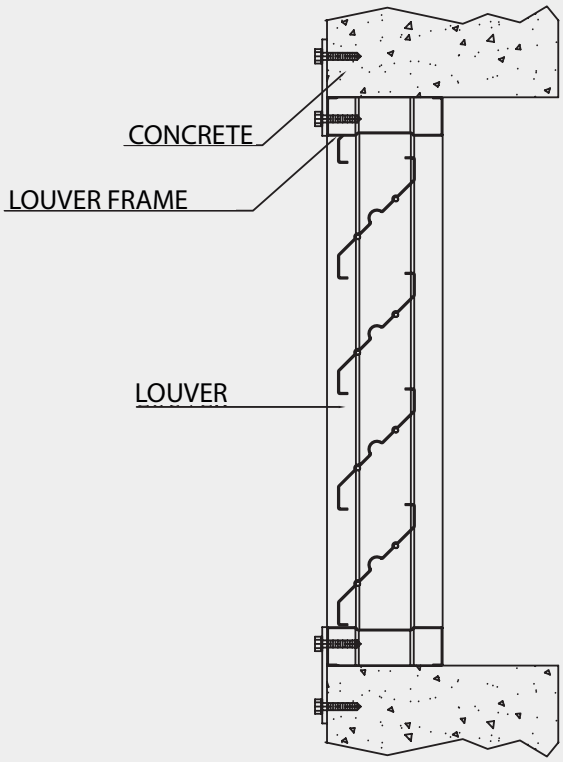

ANGLE SUBFRAME

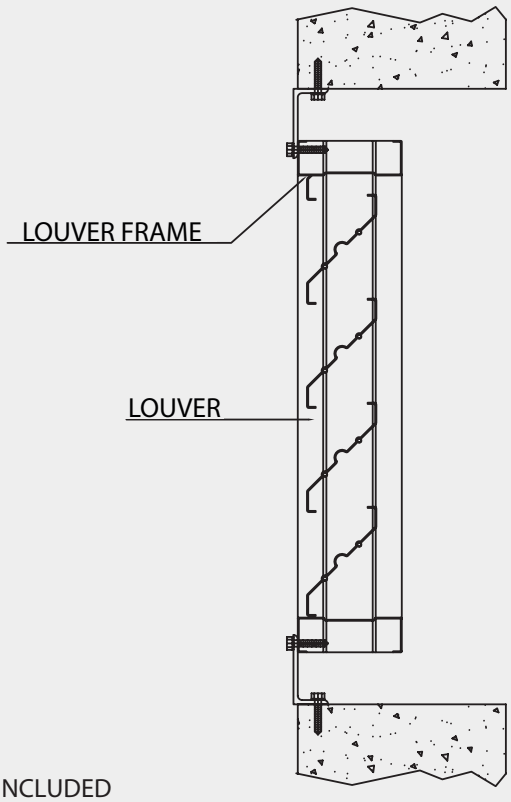

- MOUNTING HARDWARE NOT INCLUDED

Louver LA4 / Aluminum-Steel

LOUVERS + SPIRODUCT + GRILLES+ DIFFUSERS + FILTERS + FLEXIBLE DUCT + ACCESORIES

7 Nomenclature

LA4	A	B	12.00	12.00	P	S	S	S
PRODUCT	MATERIAL	PAINT COLOR	WIDTH	HEICHT	EXTERIOR SCREEN	INTERIOR SCREEN	FILTER HOLDER OPTION	FILTER

LA4 PRODUCT	A MATERIAL	B PAINT COLOR	12.00 WIDTH	12.00 HEIGHT	P EXTERIOR SCREEN	S INTERIOR SCREEN	S FILTER HOLDER OPTION	S FILTER
LA4 4" FRAME ADJUSTABLE LOUVER	**A** STEEL **L** ALUMINUM	**B** WHITE **A** ALUMINIUM (NATURAL) **N** BLACK	2 WHOLE INCHES AND 2 DECIMALS	2 WHOLE INCHES AND 2 DECIMALS	**P** BIRD SCREEN **M** INSECT SCREEN **A** EXPANDED METAL/ INSECT SCREEN **S** NO SCREEN	**S** NO SCREEN **M** INSECT SCREEN **A** EXPANDED METAL/ INSECT SCREEN **P** BIRD SCREEN	**S** NO FILTER HOLDER **P** WITH FILTER HOLDER	**S** NO FILTER **F** WITH FILTER