Vermont Corp
vermontcorp.us / sales@vermontcorp.us

# Louver LD4/Aluminum-Steel

**LOUVERS + SPIRODUCT + GRILLES+ DIFFUSERS + FILTERS + FLEXIBLE DUCT + ACCESORIES**

Ventilation louver, formed by fixed horizontal fins at a separation of 4" and mounted on a 4" frame, its design allows rainwater to drain out the ends and vent outwards without allowing water to enter the interior, can withstand strong air speeds and are designed to withstand typical storms.

## 1 Finishes

**Electrostatic powder coating, baked in Brilliant White (standard).**

**Other colors available: natural gray (electrostatic powder coating) and black (baked liquid coating).**

## 2 Dimensions

**Available in even sizes from 12 x 12" to 48 x 60"**

## 3 Construction

**Manufactured from steel, model LD4A, with an aluminum LD4L option. Includes a galvanized steel sheet metal housing and a galvanized finish.**
**- Option with frame and angle flange.**
**- Option with a mesh screen featuring an angle flange.**

## 4 Applications

**It is typically installed in industrial buildings.**

**For air renewal or external ventilation, or as an architectural feature of buildings.**

## 5 View

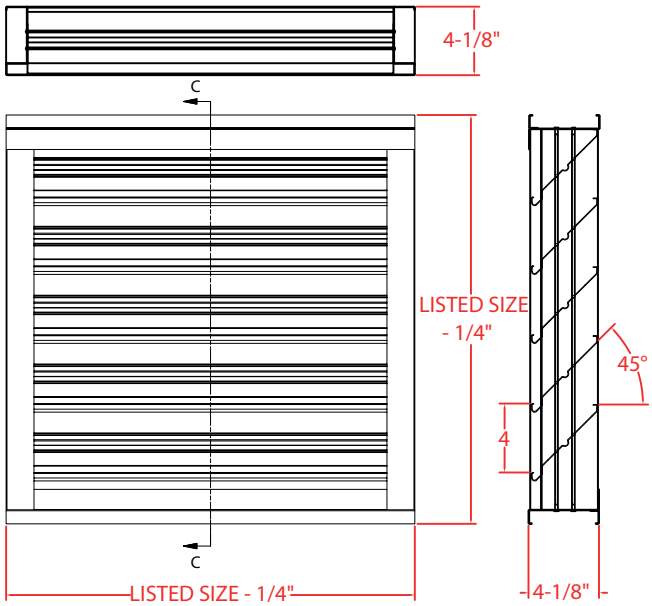




# Air Distribution Products

VERMONT CORP reserves the right to make changes without prior notice

# Louver LD4/Aluminum-Steel

**LOUVERS + SPIRODUCT + GRILLES+ DIFFUSERS + FILTERS + FLEXIBLE DUCT + ACCESORIES**

## 6 Mounting

WALL

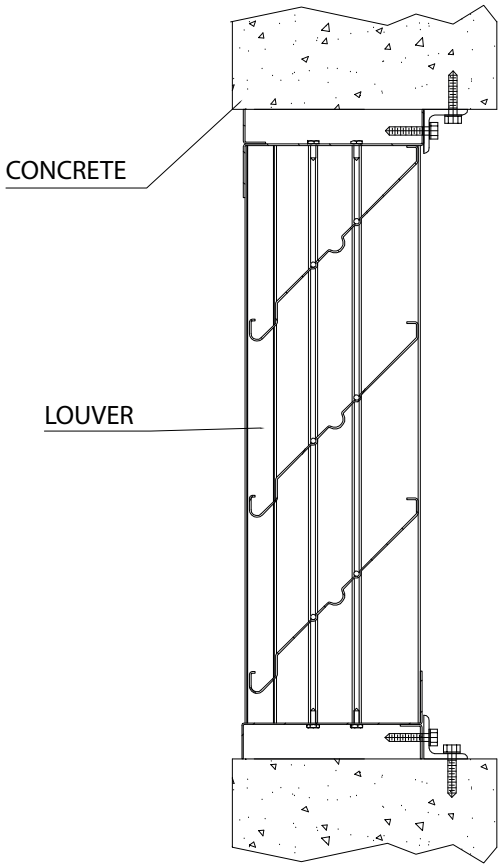


METAL PANEL

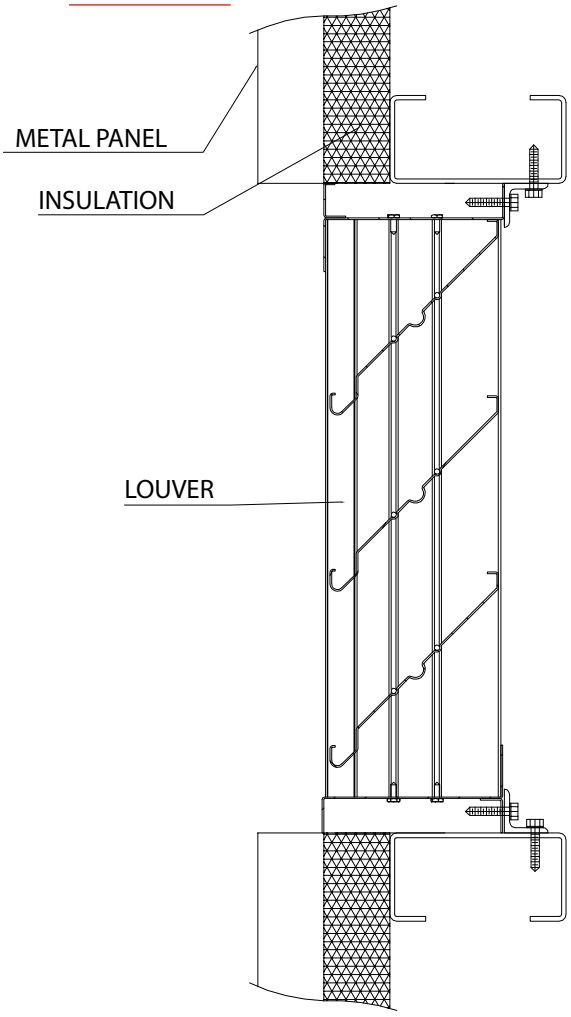



VERMONT CORP reserves the right to make changes without prior notice

# Louver LD4/Aluminum-Steel

**LOUVERS + SPIRODUCT + GRILLES+ DIFFUSERS + FILTERS + FLEXIBLE DUCT + ACCESORIES**

## 6 Mounting(Continued)

FLANGED MOUNTING

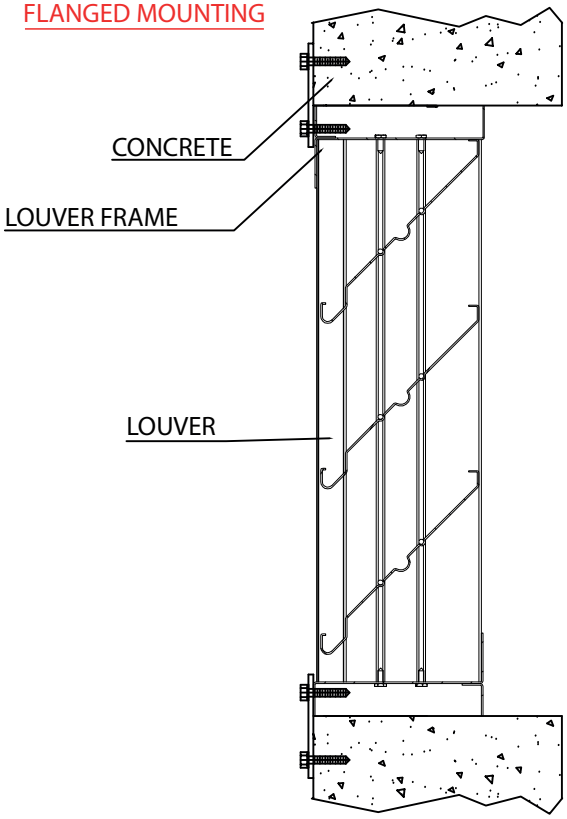


ANGLE FRAME

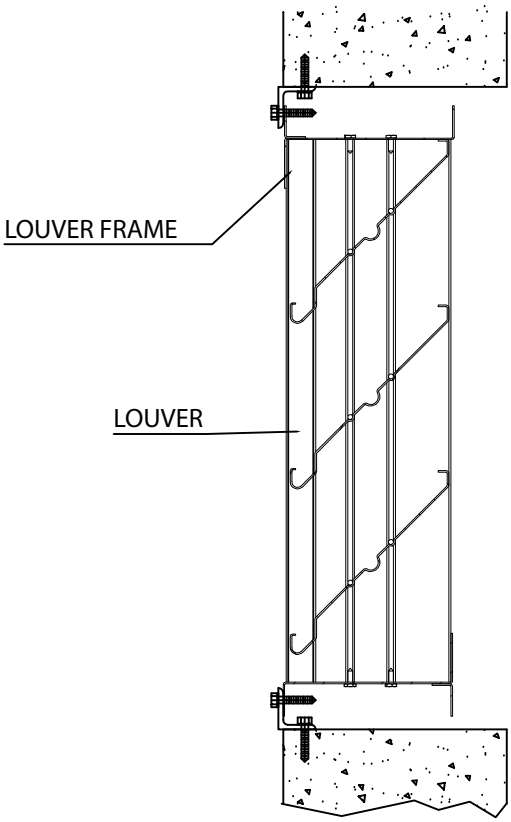



VERMONT CORP reserves the right to make changes without prior notice

# Louver LD4/Aluminum-Steel

**LOUVERS + SPIRODUCT + GRILLES+ DIFFUSERS + FILTERS + FLEXIBLE DUCT + ACCESORIES**

## 7 Nomenclature

| LD4 | A | B | 12.00 | 12.00 | P | S | S | S |
|---|---|---|---|---|---|---|---|---|
| PRODUCT | MATERIAL | PAINT COLOR | WIDTH | HEIGHT | EXTERIOR SCREEN | INTERIOR SCREEN | FILTER HOLDER OPTION | FILTER |

| LD4<br>PRODUCT | A<br>MATERIAL | B<br>PAINT COLOR | 12.00<br>WIDTH | 12.00<br>HEIGHT | P<br>EXTERIOR SCREEN | S<br>INTERIOR SCREEN | S<br>FILTER HOLDER OPTION | S<br>FILTER |
|---|---|---|---|---|---|---|---|---|
| **LD4**<br>4" FRAME DRAINABLE FIXED LOUVER | **A**<br>STEEL<br>**L**<br>ALUMINUM | **B**<br>WHITE<br>**A**<br>ALUMINUM (NATURAL)<br>**N**<br>BLACK | 2 WHOLE INCHES Y 2 DECIMALS | 2 WHOLE INCHES Y 2 DECIMALS | **P**<br>BIRD SCREEN<br>**M**<br>INSECT SCREEN<br>**A**<br>EXPANDED METAL/ INSECT SCREEN<br>**S**<br>NO SCREEN | **S**<br>NO SCREEN<br>**M**<br>INSECT SCREEN<br>**A**<br>EXPANDED METAL/ INSECT SCREEN<br>**P**<br>BIRD SCREEN | **S**<br>NO FILTER HOLDER<br>**P**<br>WITH FILTER HOLDER | **S**<br>NO FILTER<br>**F**<br>WITH FILTER |


VERMONT CORP reserves the right to make changes without prior notice